Virtual sensor coordinate frame

All published sensor data are expressed in this right-handed, device-fixed frame.

UNDERSIDE VIEW

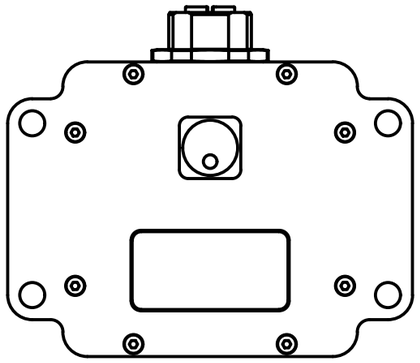

ISOMETRIC VIEW

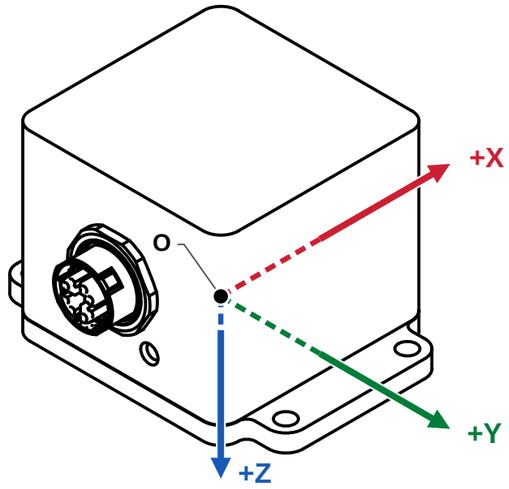

TOP VIEW / CABLE FITTED

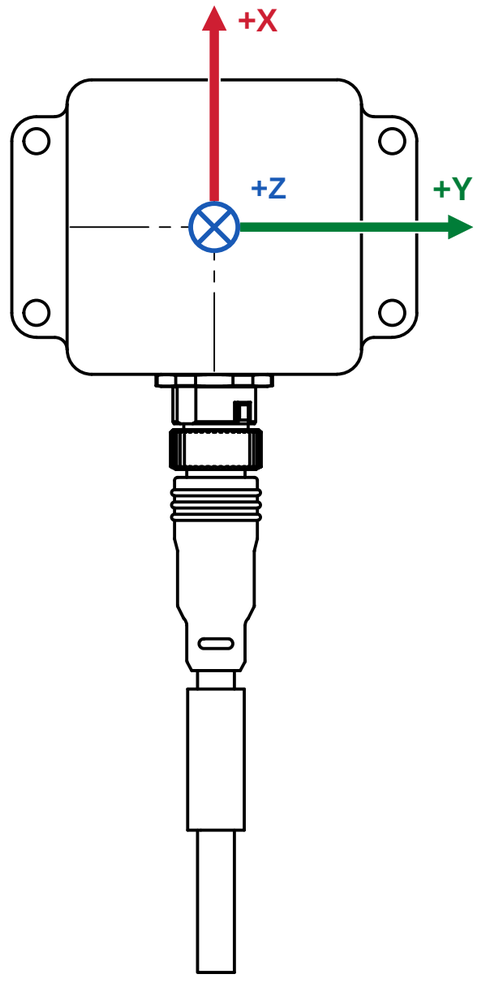

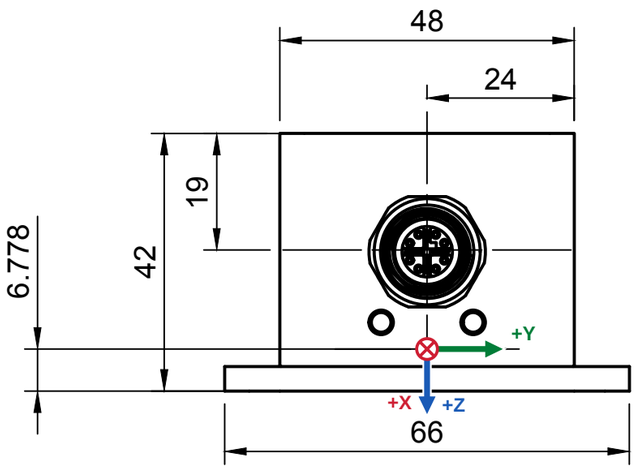

CONNECTOR-FACE VIEW

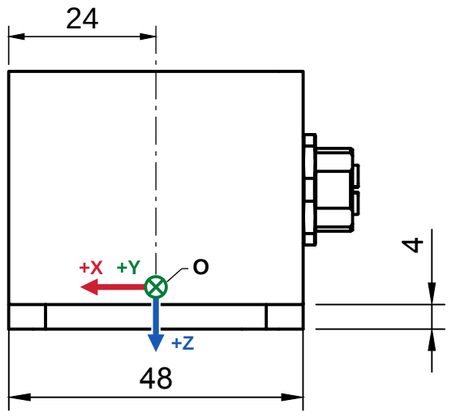

SIDE VIEW

FRAME DEFINITION

Origin O is centered between opposing case faces in plan (24 mm from each face).
Origin height is 6.778 mm above the bottom face of the case.

+X Away from connector **+Y** Right when facing connector **+Z** Toward mounting plane

⊗ Into the view – – – Dashed segments run inside the assembly.

olive® ROBOTICS

OLIVE ROBOTICS GMBH / ENGINEERING

olixSense™ X2 Ultra

DOCUMENT NUMBER	DOCUMENT TYPE	STATUS
OLV-ENG-X2U-ASM-001	Assembly drawing	For review

REVISION	REVISION DATE	APPROVAL	SIZE / UNITS	SOURCE SHEET
B	2026-11-21	Pending	A3 / mm	02 / 02